The print-out is not subject to the modification service.

CONFIDENTIAL! Intended for internal and supplier use

EN

supp. No.	material no. processing and surface treatment acc. to STAB-Spec. 10006248 Tab. XVI optimized (a) version 1	10006248 Tab. X (a) version 1	10028959 Tab. 1 (b) version 2	A overall length	E length without endfitting stud
41	827465	827465	827465	137.5	129.5
42	500514	500514	500514	198.0	190.0
43	522263	522263	522263	162.0	154.0
44	524414	524414	524414	119.0	111.0
45	524892	524892	524892	84.0	76.0
46	544490	544490	544490	156.0	148.0
47	553333	553333	553333	143.5	135.5
48	576994	576994	576994	190.0	182.0
49	590856	590856	590856	108.0	100.0
50	595158	595158	595158	168.0	160.0
51	604479	604479	604479	173.0	165.0
52	636745	636745	636745	66.0	58.0
53	134130	134130	134130	97.5	89.5
54	174522	174522	174522	150.0	142.0
55	937412	937412	937412	80.0	72.0
56	953664	953664	953664	132.0	124.0
57	965853	965853	965853	59.0	51.0
58	983539	983539	983539	136.5	128.5
59	984734	984734	984734	105.0	97.0

version 1 (only self-manufacturing) * material: 010707

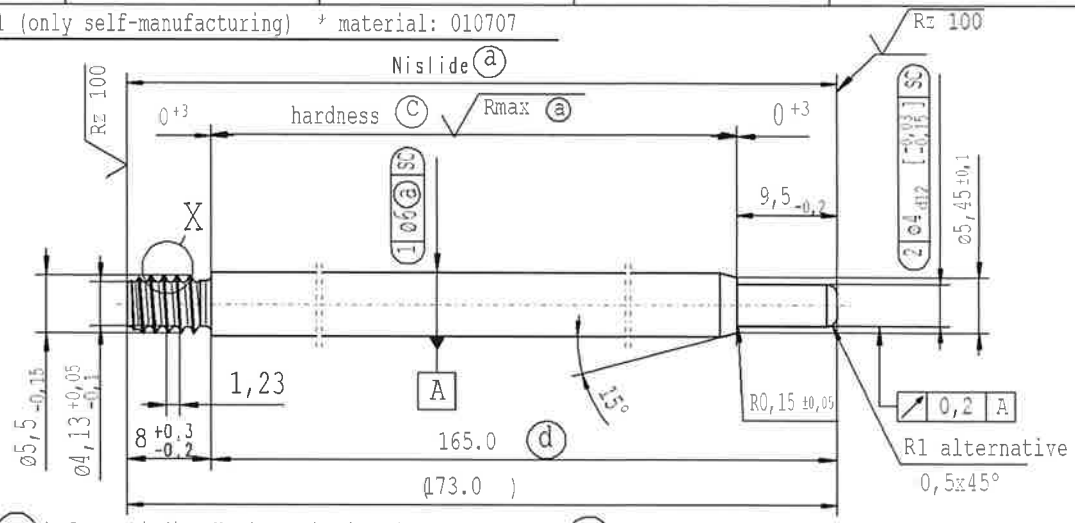

(c) before grinding: Hardness depth and hardness test acc. to STAB-Spec. 10258370

(d) tolerances: +0,2 -0,1 after turning; ±0,2 after straightening; ±0,2 after nisliding

version 2 (only external production) * material: 1.1193 S45C JISG 4051

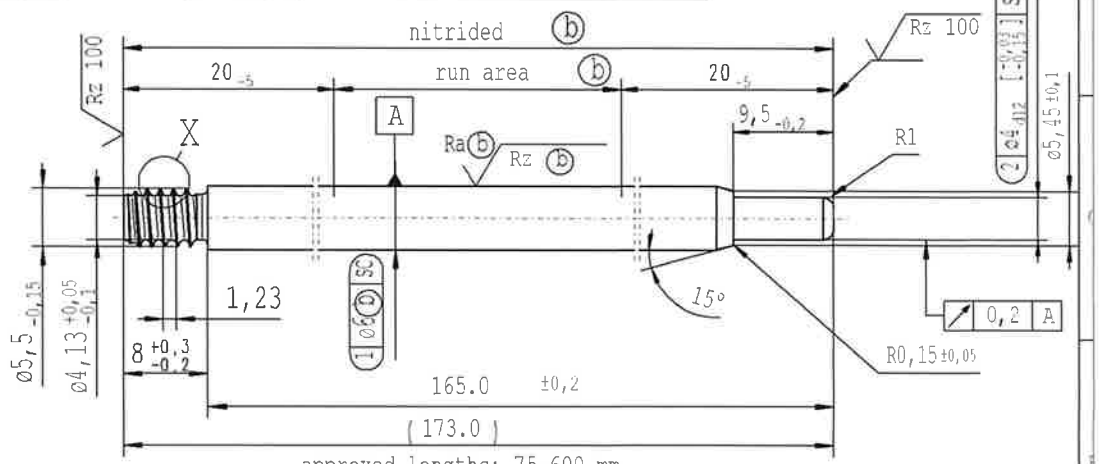

ZS CN ☒
ZS RO ☒

approved lengths: 75-600 mm

pre-worked: (only self-manufacturing)

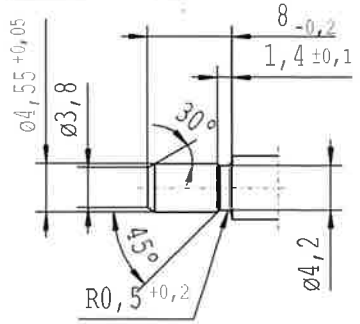

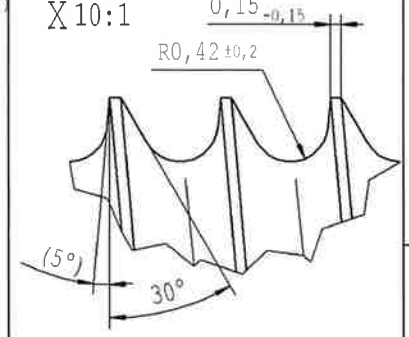

Rz 25 (Rz 100 Rmax (a) Ra (b) Rz (b)) ↙+0,2 ↙-0,2

sheet 3 of 7

AIAG CQI-standards acc. to STAB-Spec. 10027692

Environmental protection acc. to STAB-Spec. 10005649

DE: X | EN: X | ES: | IT: | PR: | FR: | RO: X | CAD created document handwritten changes not permitted

new	Tab.XVI Tab. X no technical change, no new first sample required	Vers. 2 : ZS CN + RO
old	Tab.IV	Vers. 2: ZS CN
Field	-	-
Date/Name	10.10.2022 Jablonski	16.10.2023 Jablonski
Chg. No.	715956	727281
Rev.	11	12

Material: *

Edge tolerances acc. to DIN ISO 13715

Surface finish DIN EN ISO 1302

Replaces:

STABILUS

All dimensions are in mm

Scale: (Original DIN A3) 2:1

Marking of special characteristics according to STAB-Spec. 10270932

Dimensions without tolerances DIN ISO 2768-mK

We reserve all rights to this document, to any patents or patent registrations related hereto, and to the duplication, retransmission by third parties and misc. use. Any use of this document is not permitted without the written consent of STABILUS.

	Date	Name
Drawn by	07.12.2007	Höfer
Checked	31.10.2023	Klinker

Document No.: 10151336

Material No.:

PISTON ROD

Ident. Doc.:

Erstelldatum: 29/4/2024 - 13:45