The print-out is not subject to the modification service.
CONFIDENTIAL! Intended for internal and supplier use
EN

supp. No.	material no. processing and surface treatment acc. to STAB-Spec. 10006248 Tab. XVI optimized (a) version 1	10006248 Tab. X (a) version 1	10028959 Tab. I (b) version 2	A overall length	E length without endfitting stud
404	628383	628383	628383	120.5	112.0
405	628861	628861	628861	489.0	480.5
406	716335	716335	716335	172.5	164.0
407	897736	897736	897736	200.0	191.5
408	065778	065778	065778	193.0	184.5
409	044747	044747	044747	239.5	231.0
410		380303	380303	240.0	231.5
411	502193	502193	502193	227.0	218.5
412	503627	503627	503627	248.5	240.0
413	507212	507212	507212	233.0	224.5
414	701520	701520	701520	333.5	325.0
415	702476	702476	702476	344.0	335.5
416	934306	934306	934306	100.0	91.5
417	127204	127204	127204	84.0	75.5
418	169746	169746	169746	112.5	104.0
419	186476	186476	186476	208.0	199.5
420	188149	188149	188149	326.5	318.0
421	318404	318404	318404	168.5	160.0
422	787324	787324	787324	270.5	262.0

pre-worked: (only self-manufacturing)

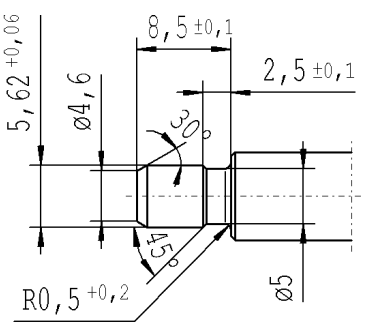

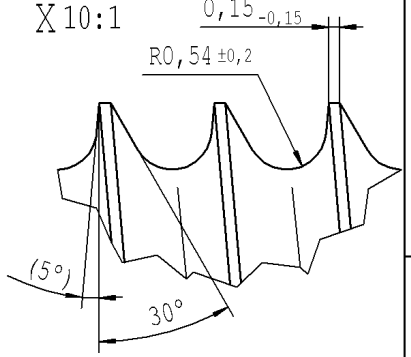

version 1 (only self-manufacturing) * material: 010731

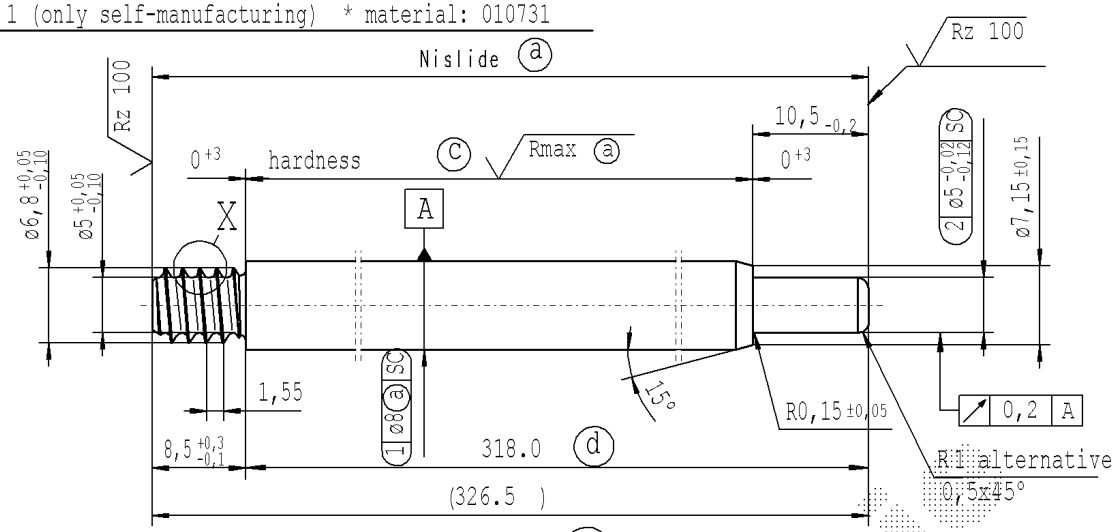

(c) before grinding: Hardness depth and hardness test acc. to STAB-Spec. 10258370

(d) tolerances: +0,2 -0,1 after turning
±0,3 after straightening
±0,3 after nisliding

version 2 (only external production) * material: 1.1193 S45C JISG 4051 alternatively only for ZS-RO material: 184083 (C35EC)

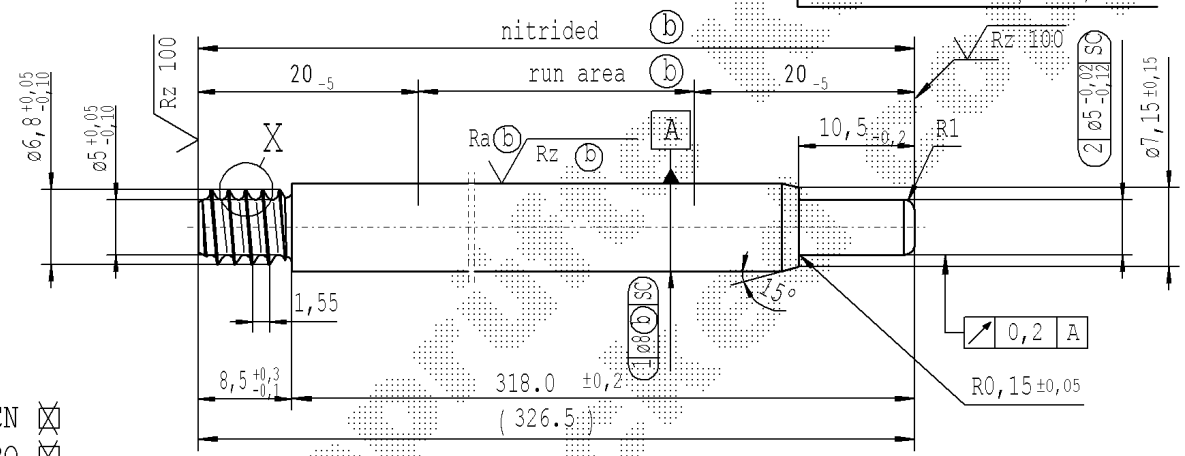

ZS CN ☒
ZS RO ☒

approved lengths: 50-600 mm

Rz 25 (Rz 100 Rmax (a) Ra (b) Rz (b)) +0,2 -0,2

sheet 20 of 21

AIAG CQI-standards acc. to STAB-Spec. 10027692

Environmental protection acc. to STAB-Spec. 10005649

DE: X	EN: X	ES: X	IT:	PR: X	FR:	RO: X	CAD created document handwritten changes not permitted

Ident. Doc.:		
new	version 2 .... alternatively only for ZS-RO material: 184083 (C35EC)	ø5 -0,02 -0,12 Span. version created no technical change, no new first sample required
old	-	ø5 -0,020 -0,120
Field	D/1-5	-
Date/Name	26.07.2022 Hein	29.01.2024 Jablonski
Chg. No.	713498	730057
Rev.	22	22

Material: *
Edge tolerances acc. to DIN ISO 13715
Surface finish: DIN EN ISO 1302
Replaces:

STABILUS

All dimensions are in mm
Scale: (Original DIN A3) 2:1
Marking of special characteristics according to STAB-Spec. 10270932
Dimensions without tolerances DIN ISO 2768-mK

We reserve all rights to this document, to any patents or patent registrations related hereto, and to the duplication, retransmission by third parties and misc. use. Any use of this document is not permitted without the written consent of STABILUS.

PISTON ROD

	Date	Name
Drawn by	05.12.2007	Höfer
Checked	29.01.2024	Klinkner

Document No.: 10151065
Material No.:

Erstelldatum: 1/3/2024 - 11:26
***** Druckdatum: 4/17/2024 / 4:23:21 AM ***** Ausdruck nicht massgeblich *****
PLANT: RO01 PRINTER : AFANG DOK-NR.:10151065