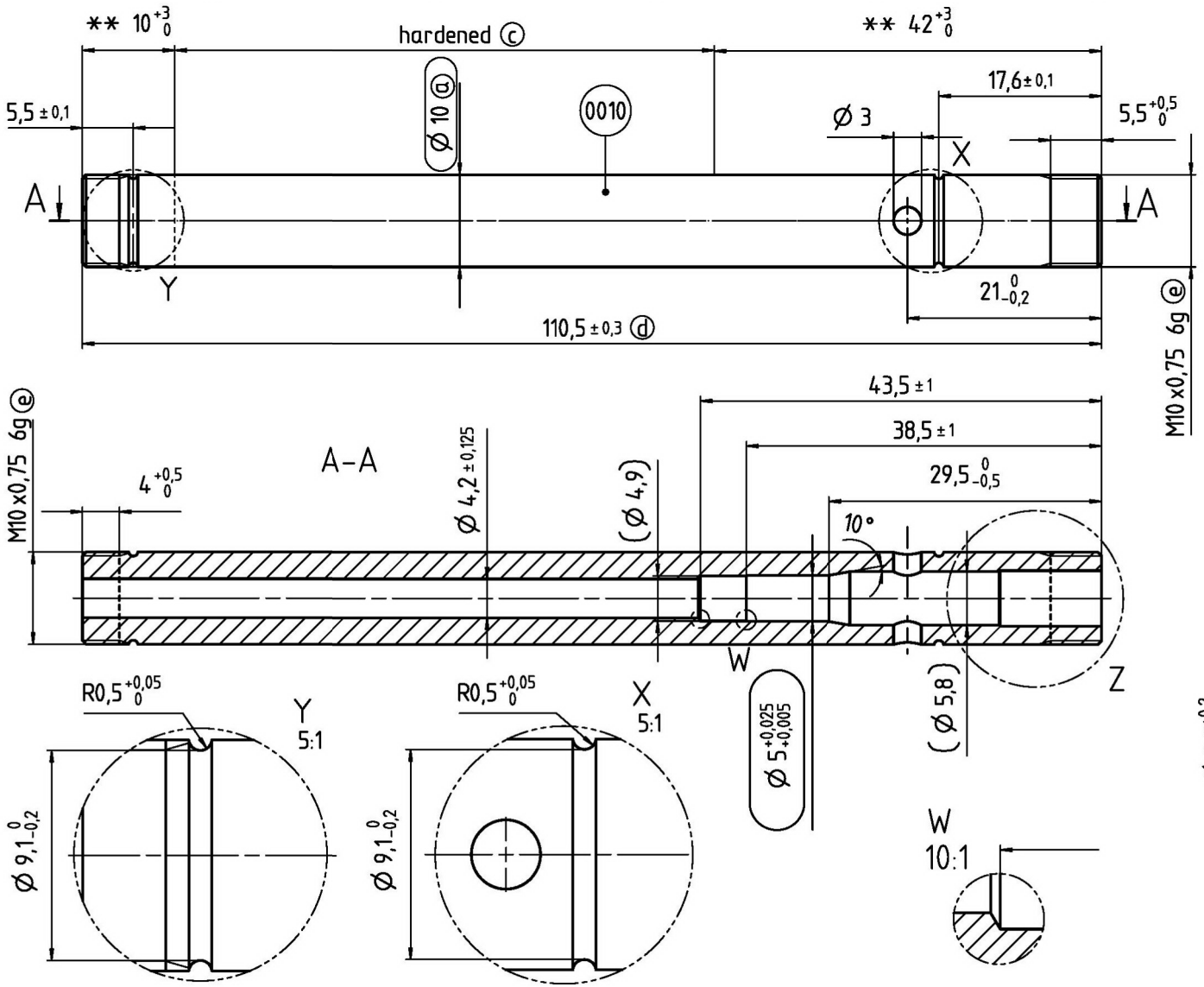

ⓐ grinding dimension Ø 10 -0,046 -0,057
Piston Rod processing acc to STAB-Spec. 10006248 Tab. I
without surface treatment

Rmax after grinding ≤ 1,5µm

ⓒ before grinding:
Hardness depth and hardness test acc. to STAB-Spec. 10258370

ⓓ Tolerances: +0,2 -0,1 after turning

ⓔ threaded stud rough-turned dimension Ø 9,5 -0,09, thread tolerances acc. to DIN ISO 965-3
rolled thread

** not hardened

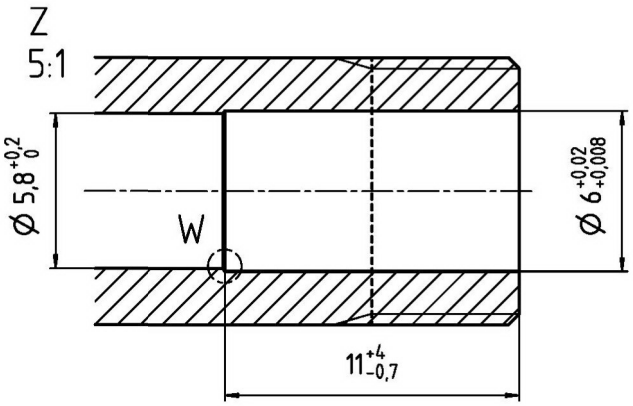

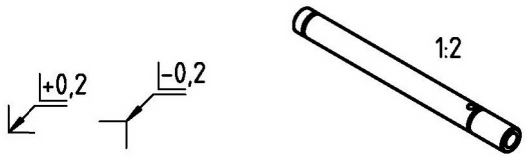

+0,2 -0,2

Environmental protection acc. to STAB-Spec. 10005649

POS.	PartNo	Part description	Amount	Unit	Remark
0010	010154	TUBE (PIPE)	110,500	MM	

DE: X	EN: X	ES:	IT:	PT:	FR:	RO: X
new	M10x0,75 6g/e; Ø4,2±0,125; camfer detail W					
old	M10x0,75 /f; Ø4,2±0,13					
Field	B-E/2-8					
Date/Name	21.01.2020 Hein					
Change No	694392					
Revision	7					

Material: ---

Edge tolerances acc. to DIN ISO 13715

Surface finish DIN EN ISO 1302

Replaces: change no. 678191

STABILUS

All dimensions are in mm

Scale: (Original DIN A3) 2:1

Marking of special characteristics acc. to STAB-Spec. 10270932

Dimensions without tolerances DIN ISO 2768-mK

We reserve all rigths to this document, to any patents or patent registrations related hereto, and to the duplication, retransmission by third parties and misc. use. Any use of this document is not permitted without the written consent of STABILUS.
CAD created document; handwritten changes not permitted

PISTON ROD

	Date	Name
Drawn by	04.08.2015	Hein,C.
Checked	25.01.2021	Diaconu Tocanie,G

Document No.: 10222295

Material No.: 111397

The print-out is not subject to the modification service
CONFIDENTIAL! Intended for internal use only
EN
CAD-SYSTEM UNIGRAPHICS ID:1000010335I_UGD_000_07