The print-out is not subject to the modification service.

Intended for internal and supplier use

EN

supp. No.	material no. Surface treatment STAB-Spec. 10028959 Tab.I (b)	A overall length
32	190038	156
33	220871	225
34	222544	291
35	223022	159
36	524162	105
37	956514	108
38	568618	96
39	833911	90
40	430241	114
41	060270	135
42	091818	78
43	130297	99
44	309308	261
45	879803	133
46	055493	126
47	090626	111
48	095406	141
49	127195	144
50	167826	324
51	189097	309
52	194116	216
53	575322	84
54	509121	207
55	566964	318
56	604009	327
57	537090	297

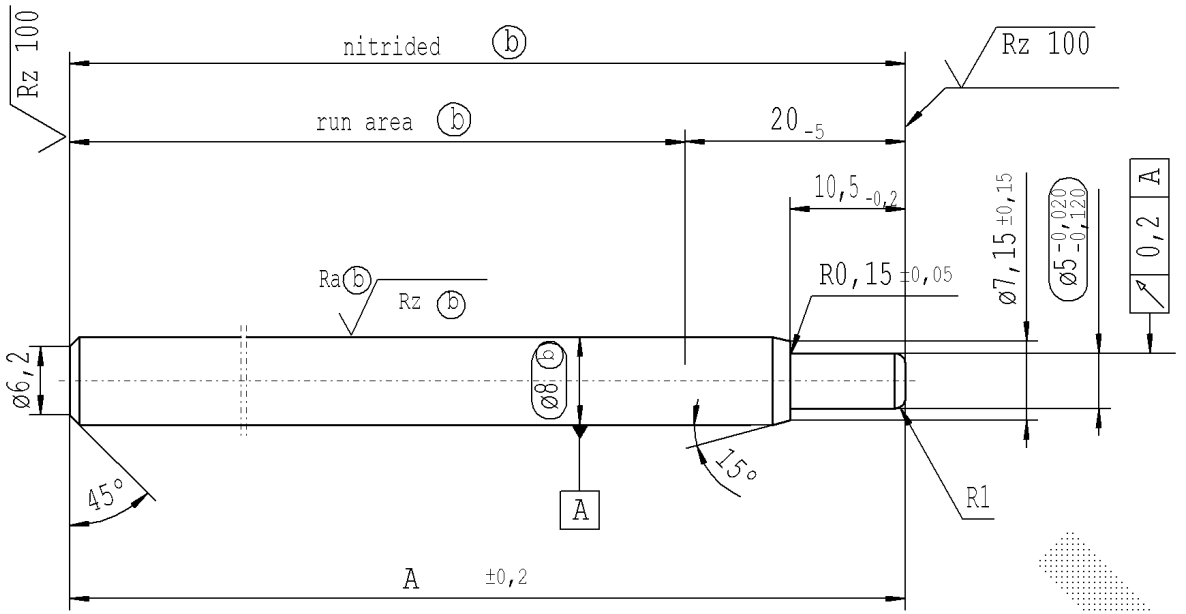

external production * material: 1.1193 S45C JISG 4051

approved lengths: 50-600 mm

Rz 25 (Rz 100 Ra (b) Rz (b)) +0,2 -0,2

sheet 2 of 2

AIAG CQI-standards acc. to STAB-Spec. 10027692

Environmental protection acc. to STAB-Spec. 10005649

DE: X | EN: X | ES: | IT: | PR: | FR: | RO: X | CAD created document; handwritten changes not permitted

new	50-600 mm	revised	(c) = acc. STAB-Spec. 10258370	new format Internal/Supplier
old	100-600 mm	-	(c) = RHT 0,4 .... 0,7 mm	Supplier drawing separately
Field	A5	-	C 5-6	-
Date/Name	19.07.2018 Höfer	29.08.2018 Jablonski	15.05.2019 Donat	28.07.2020 Höfer
Chg. No.	670346	671281	678703	690132
Rev.	6	7	8	9

Material: *

Edge tolerances acc. to DIN ISO 13715

Surface finish DIN EN ISO 1302

Replaces:

STABILUS

All dimensions are in mm

Marking of special characteristics according to STAB-Spec. 10270932

Scale: (Original DIN A3) 2:1

Dimensions without tolerances DIN ISO 2768 mK

We reserve all rights to this document, to any patents or patent registrations related hereto, and to the duplication, retransmission by third parties and misc. use. Any use of this document is not permitted without the written consent of STABILUS.

	Date	Name
Drawn by	25.04.2008	Hein
Checked	28.07.2020	Klinkner

Document No.: 10154964

Material No.:

PISTON ROD

Ident. Doc.:

Bereitstellungsdatum: 25/5/2023 - 11:43