The print-out is not subject to the modification service.

Intended for internal and supplier use

EN

supp. No.	material no. processing and surface treatment acc. to STAB-Spec. 10006248 Tab. XVI optimized (a) version 1	10006248 Tab. X (a) version 1	10028959 Tab. I (b) version 2	A overall length	E length without endfitting stud
328	989988	989988	989988	210.0	201.5
329	054065	054065	054065	198.0	189.5
330	150860	150860	150860	163.5	155.0
331	169741	169741	169741	123.0	114.5
332	223038	223038	223038	387.0	378.5
333	282788	282788	282788	358.0	349.5
334	462038	462038	462038	288.0	279.5
335	483070	483070	483070	273.0	264.5
336	504341	504341	504341	147.0	138.5
337	505297	505297	505297	224.5	216.0
338	507926	507926	507926	263.5	255.0
339	508404	508404	508404	246.5	238.0
340	518681	518681	518681	229.0	220.5
341	557638	557638	557638	281.0	272.5
342	641527	641527	641527	244.0	235.5
343	797116	797116	797116	194.0	185.5
344	797594	797594	797594	296.5	288.0
345	848979	848979	848979	241.5	233.0
346	853042	853042	853042	260.0	251.5

pre-worked: (only self-manufacturing)

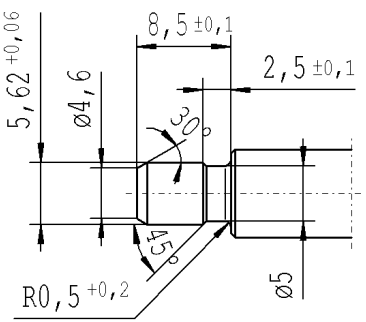

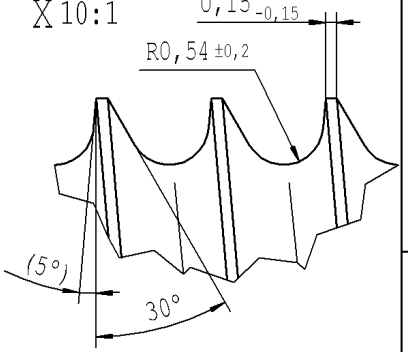

version 1 (only self-manufacturing) * material: 010731

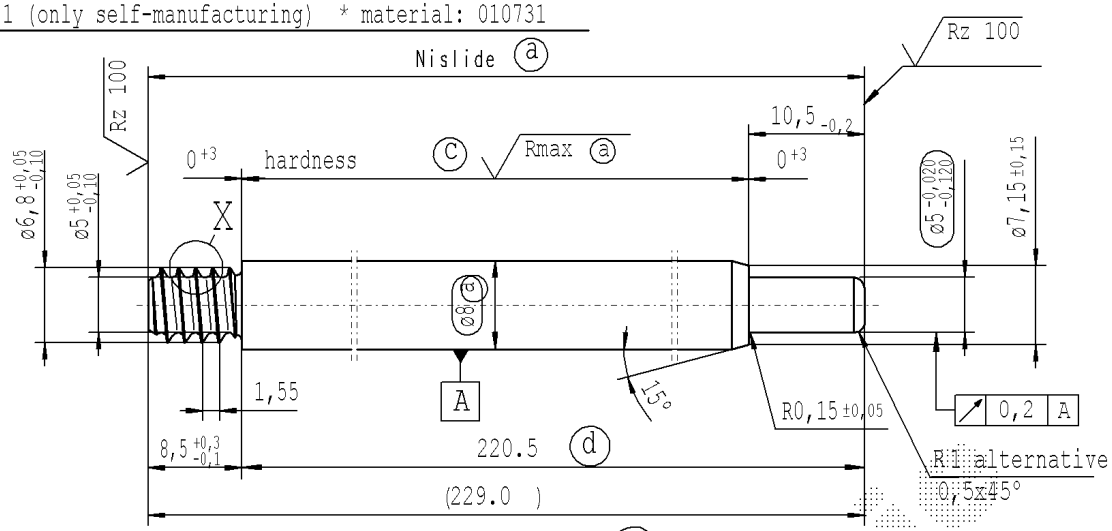

(c) before grinding: Hardness depth and hardness test acc. to STAB-Spec. 10258370

(d) tolerances: +0,2 -0,1 after turning; ±0,3 after straightening; ±0,3 after nisliding

version 2 (only external production) * material: 1.1193 S45C JISG 4051

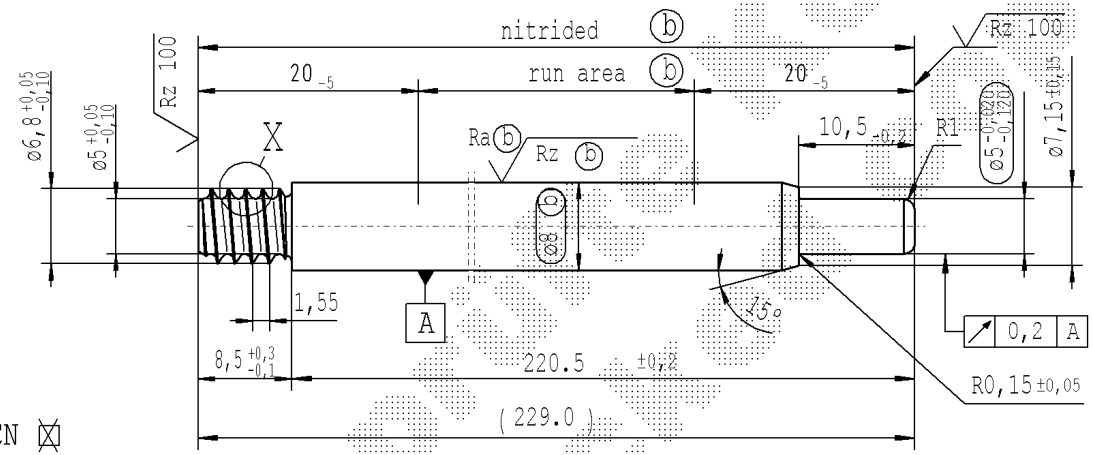

ZS CN ☒
ZS RO ☒

approved lengths: 50-600 mm

Rz 25 (Rz 100 Rmax (a) Ra (b) Rz (b)) +0,2 -0,2

sheet 16 of 20

AIAG CQI-standards acc. to STAB-Spec. 10027692

Environmental protection acc. to STAB-Spec. 10005649

DE: X	EN: X	ES:	IT:	PR: X	FR:	RO: X	CAD created document handwritten changes not permitted

new	Tab XVI no technical change, no new first sample required	ZS CN / ZS RO no technical change, no new first sample required
old	Tab IV	-
Field	F 8	B/5
Date/Name	12.08.2021 Donat	10.03.2022 Hein
Chg. No.	699704	707979
Rev.	21	21

Material: *

Edge tolerances acc. to DIN ISO 13715

Surface finish: DIN EN ISO 1302

Replaces:

STABILUS

All dimensions are in mm

Marking of special characteristics according to STAB-Spec. 10270932

Scale: (Original DIN A3) 2:1

Dimensions without tolerances DIN ISO 2768-mK

We reserve all rights to this document, to any patents or patent registrations related hereto, and to the duplication, retransmission by third parties and misc. use. Any use of this document is not permitted without the written consent of STABILUS.

	Date	Name
Drawn by	05.12.2007	Höfer
Checked	11.03.2022	Klinkner

Document No.: 10151065

Material No.:

PISTON ROD

Ident. Doc.:

Erstelldatum: 31/3/2022 - 7:15